Metropol
4-hole rim mounted bath mixer with loop handles and Secuflex
Surfaces: **Chrome** Article Number: **74552000**

Description

product features

- consists of: 4-hole rim mounted bath mixer, hand shower, shower hose, shower holder
- projection 197 mm
- connection type: basic set
- spray type mixer: normal spray
- spray type hand shower: Rain, RainAir, Whirl
- maximum pull-out length of hand shower: 1.10 m
- flow rate at 3 bar: 22 l/min
- ceramic valves hot/ cold 90°
- min. operating pressure: 1 bar
- max. operating pressure: 10 bar
- connection dimension: DN15

Technology

Product image

Scale drawing

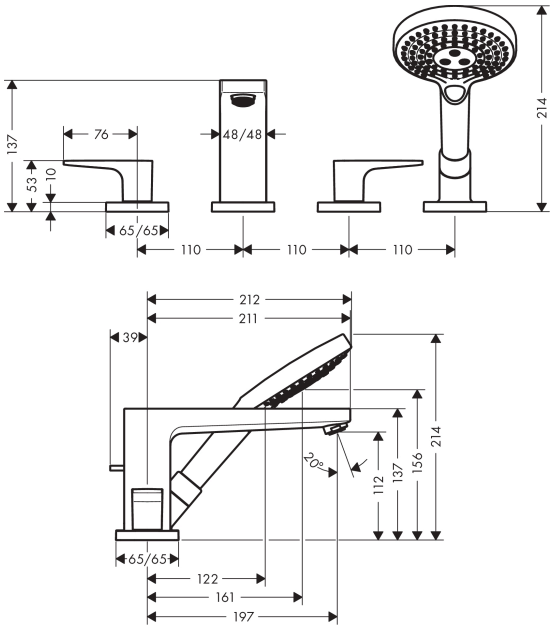
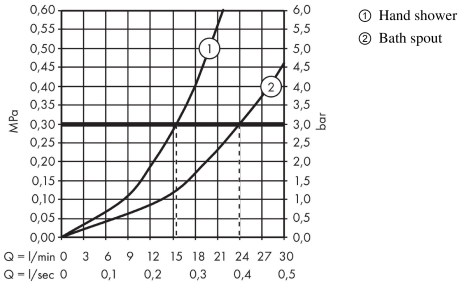
Flowchart