ROHL

Authentic Luxury for Kitchen and Bath®

www.rohlhome.com

PALLADIAN SINGLE LEG FLOOR MOUNT TUB FILLER

ROHL Italian Bath

N1987LM/TO

FEATURES

- Trim Only
- Must order rough valve to complete: R922390000
- Popular single leg, floor mount tub filler
- 8-10 GPM flow rate at 60 PSI for tub filler
- Brass construction
- 1/4-turn ceramic disc control cartridge
- Side mounted single metal lever for volume and temperature control
- Includes single-function handshower with easy clean spray face; 1.8 GPM flow rate at 60 PSI
- 59” flexible metal hose length
- 360° swivel spout; 10 1/4” spout reach; 42 5/16” spout outlet height
- 1/2” female connections
- Rough must be recessed under the finished floor Remote thermostatic valve may be needed; verify local code requirements
- Not available in Tuscan Brass

COLORS/FINISHES

- Polished Chrome
- Polished Nickel
- Satin Nickel
- Italian Brass*
- Unlacquered Brass**

WARRANTY
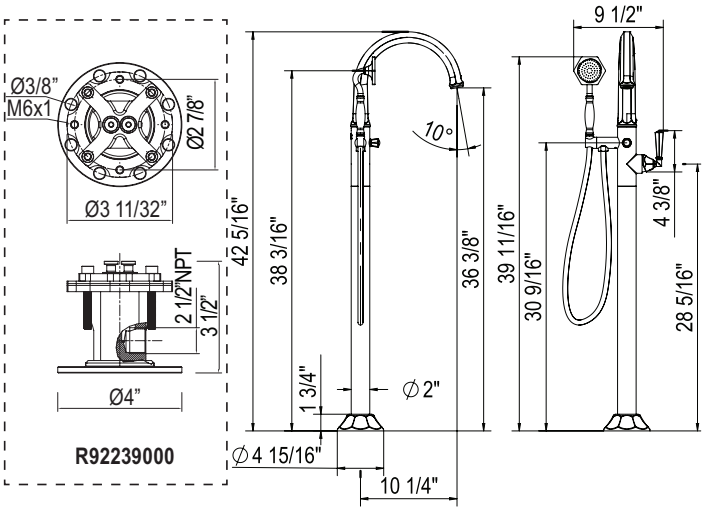
• Limited Lifetime
(*) 5-Year Limited Warranty
(**) No Warranty